1. Overview

The Mod. A1303 PCI CAENET CONTROLLER is a 32-bit PCI interface card. It allows the control of a HS CAENET network through a standard PC.

The communication line uses a simple 50 Ω coaxial cable as its physical transmission medium. In order to avoid ground loops line connectors are optocoupled.

A functional block diagram of an HS CAENET node is shown in Fig. 1.1

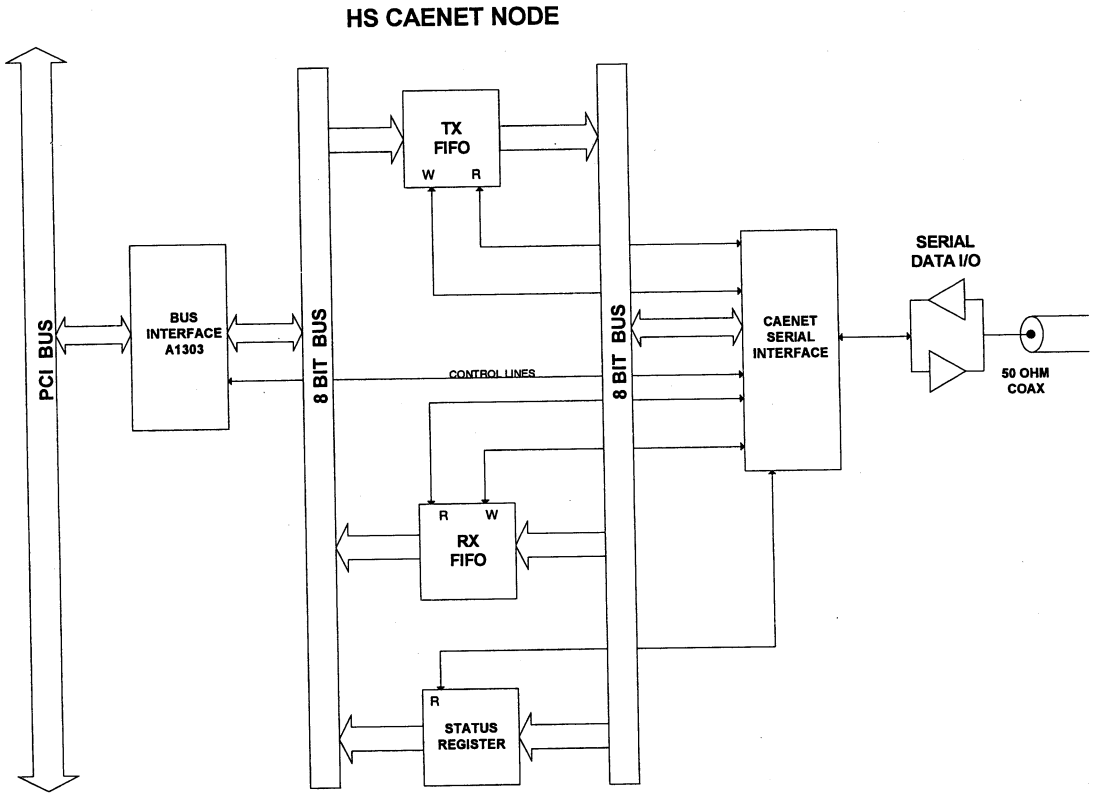

Fig. 1.1: HS CAENET node functional block diagram

3. Technical specifications

3.1. Packaging

Standard 32-bit 33 MHz universal 3.3 V / 5 V PCI card

3.2. External components

CONNECTORS: 2 bridged LEMO 00 type communication line connectors, high impedance[2].

DISPLAYS: HS CAENET active LED

3.3. Physical line and node capabilities

Output Driver Signal characteristics:	0 to +4 V on 50 Ω impedance
Input Receiver characteristics:	+1.2 V threshold discriminator
RG174 Cable attenuation:	-6.2 dB/100 m @ 1 MHz
HS CAENET Node attenuation:	≈ -0.07 dB @ 500 kHz

It is worth noting that the maximum frequency of the HS CAENET signal is 500 kHz (a stream of bits toggling between 0 and 1 transmitted at the rate of 1 MBaud).
Through the use of appropriate adapters, one can connect the HS CAENET nodes via an RG58 cable, that has better attenuation features (-1.4 dB/100 m @ 1 MHz) at approximately the same cost.

3.4. Power requirements

PCI class 7.5 W maximum

[2] The HS CAENET line must be terminated on 50 Ω on both sides.