FUNCTIONAL DESCRIPTION

LeCroy's NIM discriminators offer versatility, high speed, multiple input and high performance packaged in single-width NIM modules. All models have small double pulse resolution times and have updating capabilities to reduce dead time. Input signal threshold levels as well as output pulse widths are fully adjustable over a wide range for each channel. Each module offers at least three outputs per channel for added convenience and has a maximum counting rate exceeding 100 MHz. In addition, a common Veto or Inhibit is provided.

Each module offers a variable threshold from -30 mV (-15 mV for the Model 4608C) to -1 V via a front-panel screwdriver adjustment for each channel. The low threshold level is useful when working with signals directly from photomultipliers and other detectors. A monitor point is provided to permit measurement of the threshold level with a voltmeter, assuring accurate results even in varied operating environments. Threshold stability is 0.3%/°C or better. Low input reflections make these units less sensitive to multiple pulsing.

The Model 623B and the Model 821 operate at maximum rates of 100 MHz while the Model 4608C operates up to 150 MHz. All modules have updating capability which permits retriggering while an output from a previous input is still present. A second pulse, which exceeds threshold while an output is already occurring extends the present output by the preset width. However, if the second threshold crossing occurs within the double pulse resolution time, the module will not respond. This configuration is useful when the discriminators are used in DC coincidence logic.

The 821 and 4608C have a selectable Burst Guard operation. In this mode, the output is extended until the falling edge of the last pulse of the burst when input pulses are separated by less than the resolving time. This feature is particularly important when the module is used in Veto applications.

Although the actual width depends on the rate of input and the mode of operation, outputs of the modules are NIM Standard (see Application Note AN-34) level signals with minimum widths set by the front-panel controls. There are a minimum of three standard negative NIM outputs per channel. In addition, the 821 and the 4608C both have one complementary output per channel.

The 4608C includes a built-in test feature which simulates an input signal for each channel. The test feature is enabled with the receipt of a NIM level applied to the front-panel Lemo connector and permits rapid simultaneous testing of all channels.

In addition, the 821 and the 4608C can be used as single channel analyzers. See LeCroy Application Note AN-2 for further details.

SPECIFICATIONS

Model 623B

INPUT

Signal Inputs: Eight inputs via Lemo front-panel connectors, 50 Ω ±5%, protected to ±5 A for 0.5 μsec clamping at +1 and -7 V. Reflections: < 4% for input pulses of 2 nsec rise time. Threshold: -30 mV to approximately -1.0 V; front-panel screwdriver adjustable. Stability: < 0.2%/°C, 20°C to 60°C operating range. Threshold Monitor: 10:1 ratio of monitor voltage to actual threshold voltage. Hysteresis: 15 mV.
Inhibit: One input via a Lemo front-panel connector, 50 Ω ±5%, permits simultaneous fast inhibiting of all channels; requires a NIM level signal (< -600 mV). Must precede input by 6 nsec to inhibit. Minimum width 8 nsec. Effective width 5 nsec less than NIM input pulse.
Bin Gate: Slow gate via rear connector and rear-panel ON-OFF switch; rise times and fall times approximately 50 nsec; clamp to ground from +5 V inhibits; direct-coupled.

OUTPUT

Negative Outputs: Three NIM level outputs, 0 V quiescently, -800 mV during output. Duration is 6 nsec to > 150 nsec, continuously variable via front-panel screwdriver control. Rise time is typically 2.1 nsec; maximum 2.5 nsec. Fall time is approximately 4 nsec at minimum width, increasing with width setting up to 10 nsec maximum. At least two outputs should be terminated in 50 Ω for optimum pulse shape. Width stability maximum ±(50 psec +0.3%)/°C for temperature variation and ±0.1% per percent variation of supply voltage. Amplitude stability is better than ±0.1%/°C.

GENERAL

Maximum Rate: > 100 MHz, input and output.
Double Pulse Resolution: Better than 9 nsec.
Input-Output Delay: 11 nsec.
Multiple Pulsing: None; one and only one output pulse of preset duration is produced for each input pulse, regardless of input pulse amplitude or duration.

Model 821

INPUT

Signal Inputs: Four inputs via Lemo connectors, 50 Ω ±5% protected to ±5 A for 0.5 µsec, clamping at +1 and -7 V. Reflections: < 1% for input pulses of 3 nsec rise time. Offset 0 ±2 mV.
Threshold: -30 mV to -1.0 V; front-panel screwdriver adjustment. Stability: ≤ 0.2%/°C over 20°C to 60°C operating range. Threshold Monitor has 10:1 ratio of monitor voltage to actual voltage, ±5%. Hysteresis: 15 mV.
Veto: Front-panel connector permits simultaneous inhibiting of all channels; 50 Ω; requires NIM-level signal; direct-coupled, must overlap leading edge of input signal. Must precede input by approximately 5 nsec to inhibit. Minimum width 5 nsec.
Bin Gate: Slow gate via rear connector and rear-panel ON-OFF switch; rise times and fall times approximately 50 nsec; clamp to ground from +5 inhibits; direct-coupled.

OUTPUT

Negative Outputs: Two bridged pairs (0 mA quiescently, -32 mA during output). Amplitude limit of -1.2 V. Rise time < 2.0 nsec, fall time < 2.5 nsec typical but slightly longer on wider output durations. Width Stability is < ±0.2%/°C maximum. Duration of output depends on mode of operation selected by front panel switch.
Update Only Mode: 5 nsec to 1 µsec, continuously variable up to 600 nsec with a setting for 1 µsec via front-panel screwdriver control. (Narrower widths possible at slight expense of amplitude.)
Burst Guard Mode: Output duration is either equal to the time-over-threshold of the input signal or equal to the preset duration, whichever is greater. For input burst rates greater than the DPR of the unit, the output is equal to the duration of the burst.

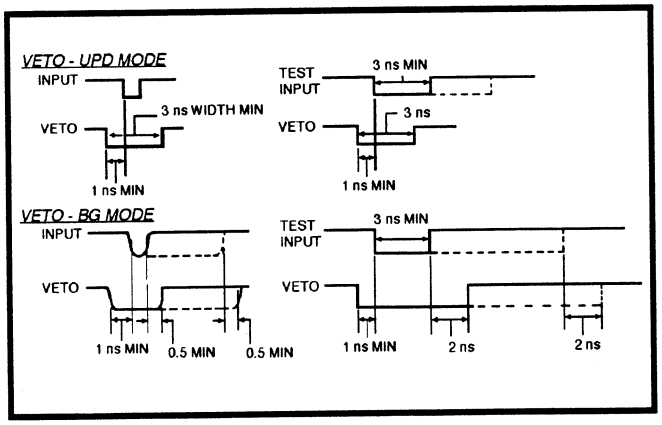

Veto Input to 4608C with Updating and Burst Guard Operations.

Fast Negative Timing Output: Differential type current source (0 mA quiescently, -16 mA in 50 Ω during output). Rise time is typically 1.5 nsec.
Complementary Output: As above except levels opposite.

GENERAL

Maximum Rate: 110 MHz typical, input and output.
Double Pulse Resolution: < 9 nsec.
Time Slewing: < 1 nsec for input amplitudes 110% of threshold and above.
Input-Output Delay: 9.5 nsec, typical.
Multiple Pulsing: None; one and only one output pulse of preset duration is produced for each input pulse regardless of input pulse amplitude or duration.
Rate LED: One per channel. Indicates discriminator output; 10 msec stretching.

Model 4608C

INPUT

Signal Inputs: Eight inputs via Lemo front-panel connectors, 50 Ω ±5% protected to ±5 A for 0.5 µsec clamping at ±5 V. Reflections: < 4% for input pulses of 2 nsec rise time.
Threshold: -15 mV to -1 V ±2.5 mV or ±5%, whichever is greater. Stability: better than 0.3%/°C to 60°C operating range. Offset ±3 mV. Threshold Monitor: front-panel test point has 10:1 ratio of monitor voltage to actual voltage ±5%. Hysteresis: Typical 3.5 mV.
Test Input: One NIM input via a Lemo connector on the front-panel, 50 Ω ±5%, triggers all channels. Minimum width: 3 nsec. Maximum rate: 150 MHz.
Veto Input: One NIM input via a Lemo front-panel connector, 50 Ω ±5%, permits simultaneous fast inhibiting of all channels. Must precede input signal by approximately 1 nsec and overlap its leading edge in Update Mode or completely overlap input signal in Burst Guard Mode. Minimum duration: 3 nsec.

OUTPUT

Negative Outputs: Three outputs, NIM (0 mA quiescently, -50 mA ±6 mA during output, -800 mV into three 50 Ω loads). Amplitude limited to -1.2 V. Duration 4.5 nsec to > 100 nsec. Rise times and fall times less than 2 nsec. Width stability better than 0.3%/°C, 821, 4608C max.
Complementary Output: One output, NIM (16 mA ±2 mA quiescently, 0 mA during output). Duration, rise times, fall times, and width stability specifications are identical to those of negative outputs.

GENERAL

Maximum Rate: 150 MHz.
Double Pulse Resolution: Typical, 5 nsec.
Time Slewing: 500 psec for input amplitudes from 2x to 20x over threshold.
Input-Output Delay: < 18 nsec.
Test-Output Delay: < 18 nsec.
Multiple Pulsing: None, one and only one output pulse is produced for each input pulse regardless of input pulse amplitude and duration.
Burst Guard: A front-panel switch enables the Burst Guard or Updating operation for all channels.

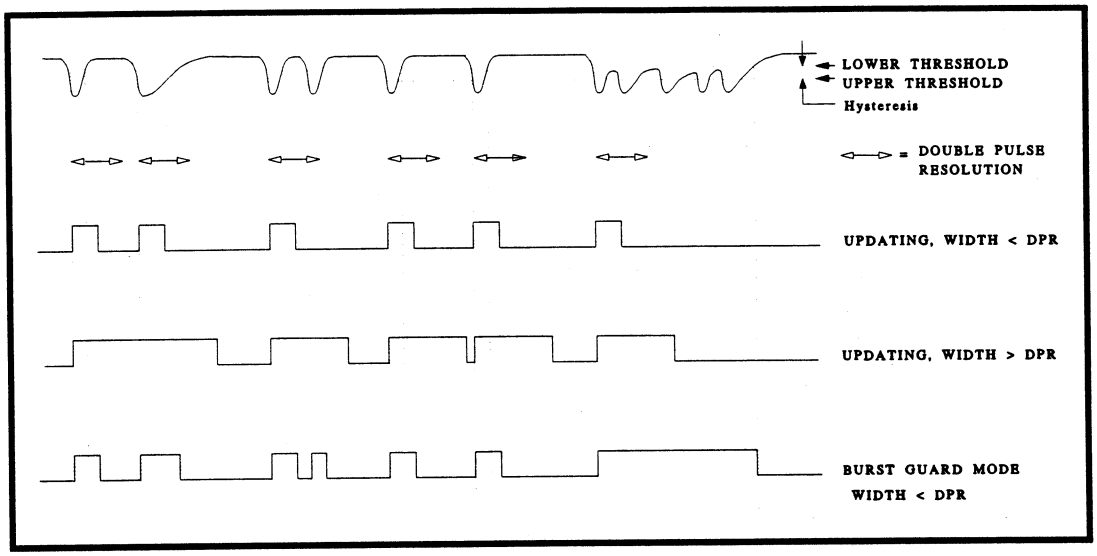

Comparison of Updating and Burst Guard Modes with various fast input signals. DPR is the Double Pulse Resolution.

NIM DISCRIMINATORS SELECTION CHART

	623B	821	4608C
INPUT			
No. of Inputs	8	4	8
Threshold	-30 mV to -1 V	-30 mV to -1 V	-15 mV to -1 V
GENERAL			
Packaging	Single-width NIM	Single-width NIM	Single-width NIM
Max. Rate	> 100 MHz	> 100 MHz	> 150 MHz
D.P.R.	9 nsec	9 nsec	5 nsec
Burst Guard	N/A	Selectable	Selectable
OUTPUT			
No. of Outputs	3 NIM	5 NIM, 1 $\overline{\text{NIM}}$	3 NIM, 1 $\overline{\text{NIM}}$
Width	6 nsec to 150 nsec	5 nsec to 600 nsec	4.5 nsec to 100 nsec
POWER			
-24 V	80 mA	85 mA	—
-12 V	195 mA	170 mA	—
-6 V	490 mA	690 mA	2.1 A
+6 V	240 mA	230 mA	0.6 A
+12 V	160 mA	15 mA	—
+24 V	—	—	0.01 A

Copyright© September 1995. LeCroy™ is a registered trademark of LeCroy Corporation. All rights reserved. Information in this publicaction supersedes all earlier versions.