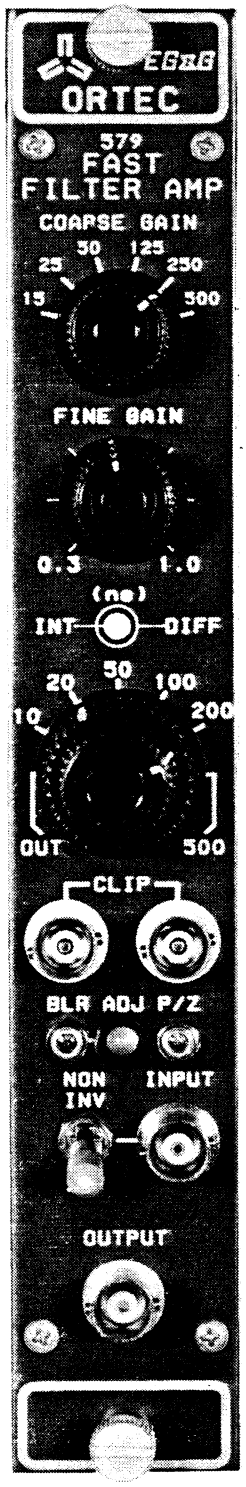
EG&G
ORTEC
579
FAST
FILTER AMP
COARSE GAIN
15
25
30
125
250
500
FINE GAIN
0.3
1.0
(ns)
INT
DIFF
10
20
50
100
200
OUT
500
CLIP
BLR ADJ
P/Z
NON
INV
INPUT
OUTPUT

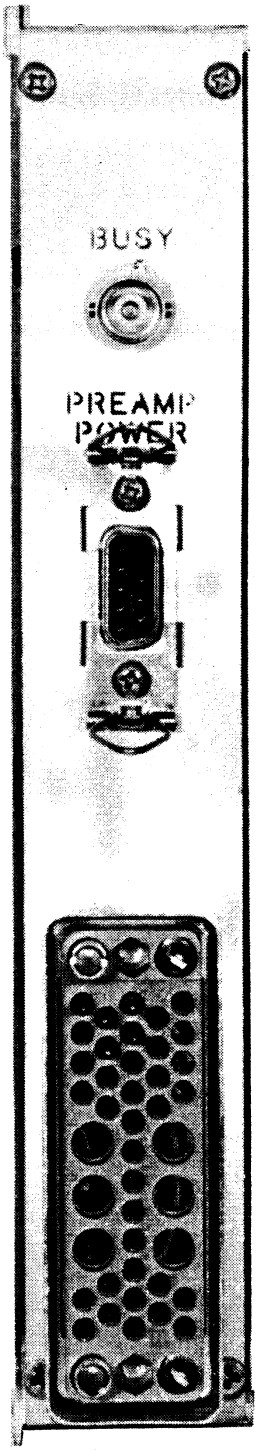
BUSY
PREAMP
POWER

EG&G ORTEC MODEL 579 FAST-FILTER AMPLIFIER

1. DESCRIPTION

The EG&G ORTEC Model 579 wideband Fast-Filter Amplifier with Gated Baseline Restorer is a state-of-the-art hybrid-circuit instrument (Fig. 1.1). It is designed to enhance fast-timing measurements by improving the slope-to-noise ratio and providing ultra-high count rate spectroscopy capability.

The experimenter will recognize EG&G ORTEC's firm commitment to fulfill the most demanding experimental needs with quality instrumentation. Fast (5 ns) rise time (Fig. 1.2), high output drive (±5 V into 50Ω), and wide voltage gain range (X0.9 – X500) make the 579 useful for many timing applications, including those utilizing low-gain photomultiplier tubes. The 579 is particularly suited for use with EG&G ORTEC Constant Fraction Discriminators such as the 583, 584, 934, or 473A in timing applications with High-Purity Germanium (HPGe) or Surface Barrier Detectors (Figs. 1.3, 1.4, and Table 1). Excellent dc and gain stability (±50 μV/°C and ±0.05%/°C respectively) eliminates the need for a dc-level adjustment (Figs. 1.5 and 1.6), and, to further improve the human interface, a Busy LED and Busy Output are included to aid in BLR adjustment and system interfacing.

In addition, the wideband gated baseline restorer and pole-zero cancellation network permit ultra-high output counting rates (Fig. 1.7). A wide variety of pulse filtering is available for improved signal processing. The 579 combines continuously variable gain, independently selectable integration and differentiation time constants (Figs. 1.8 and 1.9), and cable clipping capability (external cable delay), making this versatile unit an important asset for advanced time and energy spectroscopy.

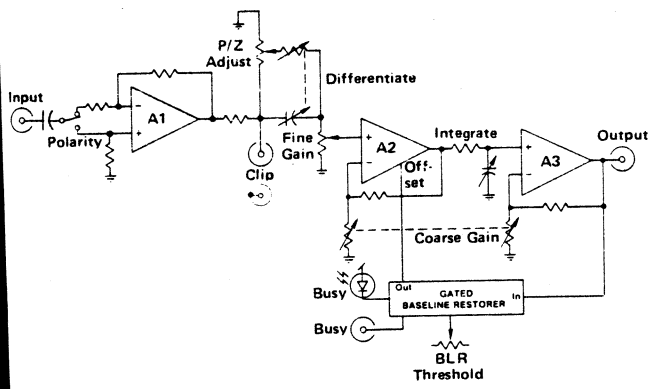

Fig. 1.1. Block Diagram of the 579 Fast-Filter Amplifier.

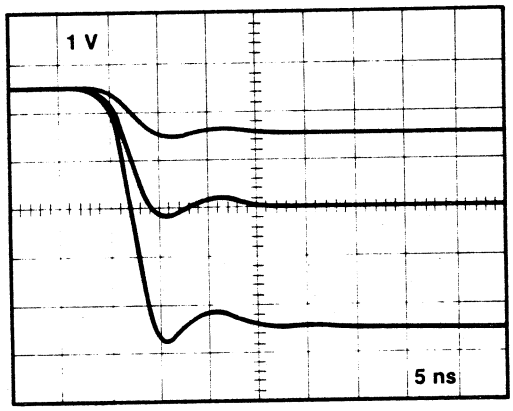

Fig. 1.2. 579 Output Signals for $\tau_I = \tau_D$ = Out at 1, 2.5, and 5 V.

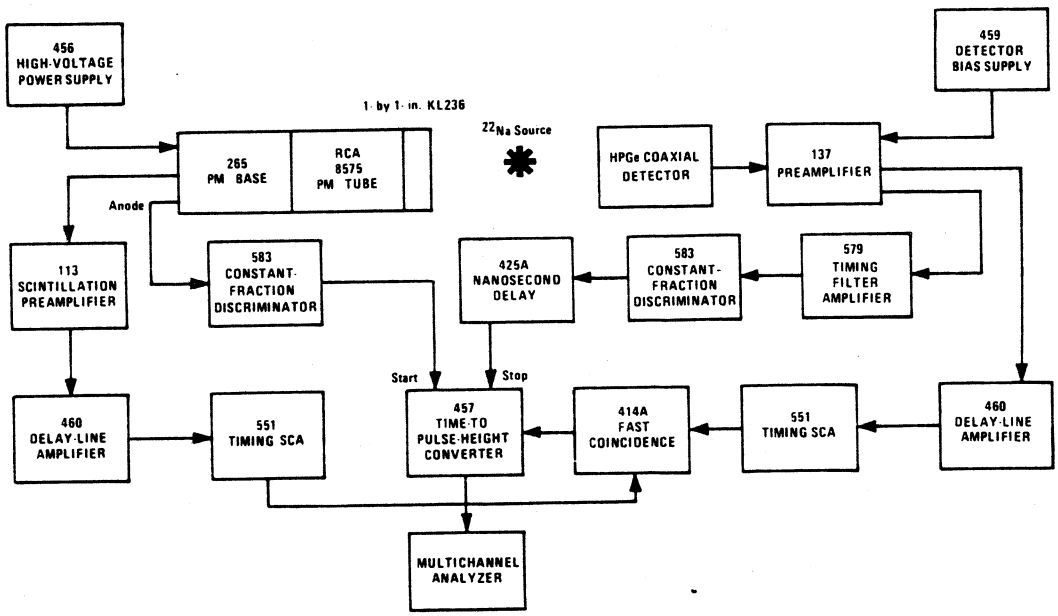

Fig. 1.3. Gamma-Gamma Coincidence System Using a Plastic Scintillator and a Large HPGe Coaxial Detector.